WORD SEARCH

```
L P H T F W G F Q R A M F N J
W A A N Q O F U N N F U A K X
Y B R E A U X E I X Z U R Y U
G K V T E A S M N R O C M W H
L W E W F R A J C K A D M O G
C T S J O L Y V G H C T X C Q
Y H T H O H S A C U M T I Y D
L O I R C K A I O R T S I B C
I S B C N G T R K U G M S C S
M A L N K S B R E A K F A S T
A U Q U A E N J N N A L W D V
F K E T N E N D N Z N I I G E
E W N K T C D F A L R I I M B
K A W A O Q H A D M E P D Z A
F J U I C E V K S U Z U F K X
```

ANIMAL
BISTRO
BREAKFAST
CHICKEN
CORN
COW
GOAT
FAMILY
FANTASTIC
PIG
MILK
LUNCH
JUICE
HORSE
HARVEST
DINNER
FARM
FUN

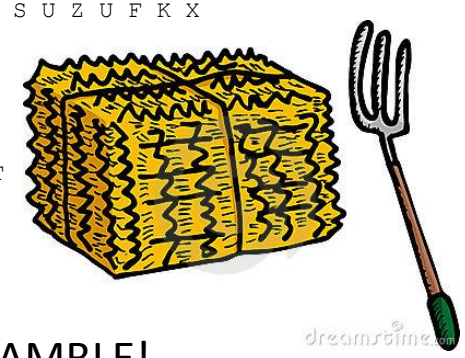

WORD SCRAMBLE!

AKTBFEARS _____
TIOHNL _____
AHLEYTH _____
LXEAR _____
UNF _____
ARRFEM_____
LAORFDI_____
SUANRATRTE_____
NISUHESN_____

Hilton
ORLANDO BONNET CREEK

Harvest bistro

KIDS Breakfast

Breakfast Buffet 10.95

Pancake Stack 8
Served with maple syrup and strawberries

Fruit Cup 6
Assorted Fruits and Berries

Cold Cereal 6
Assorted Varieties

Scrambled Eggs 7
Eggs served with two strips of Bacon or Sausage

French Toast 8
Served with maple syrup and strawberries

Beverages 2
Milk, Chocolate Milk, Tea, Juice, Soda

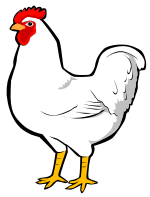

Dad needs help finding his way back to the tractor. Help Dad find his way and remind Dad - "Always Be Careful".

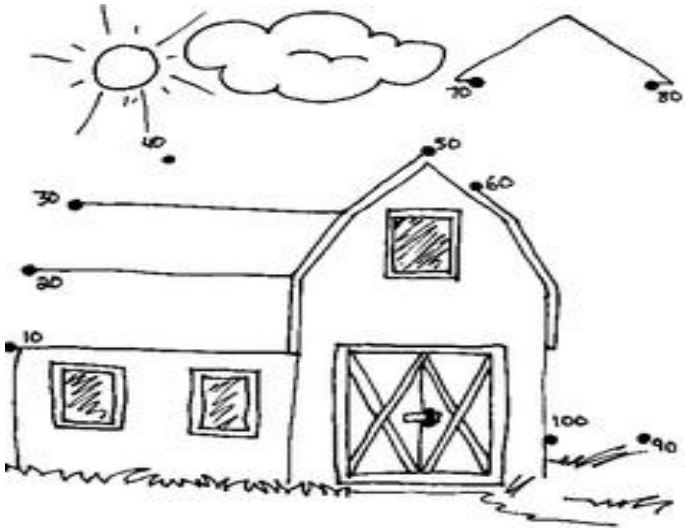

Let's visit this farmer and his stand.
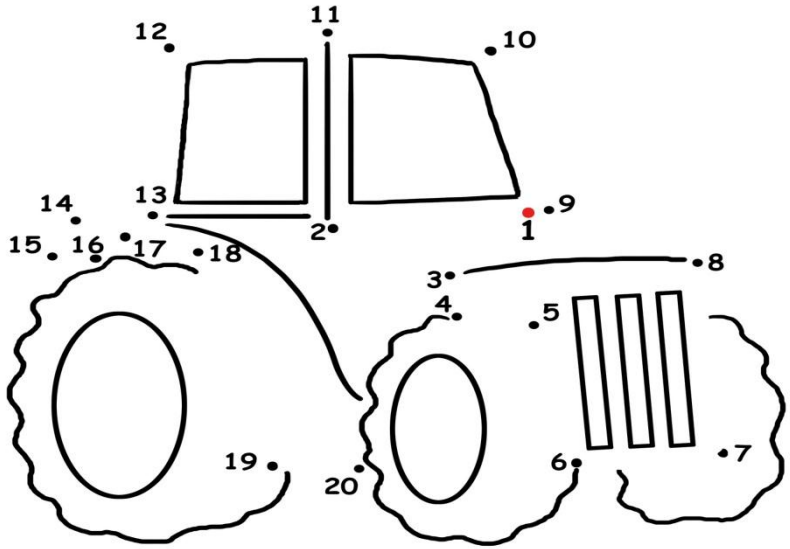
That's funny! The picture has changed! Find and circle the five things that are different.